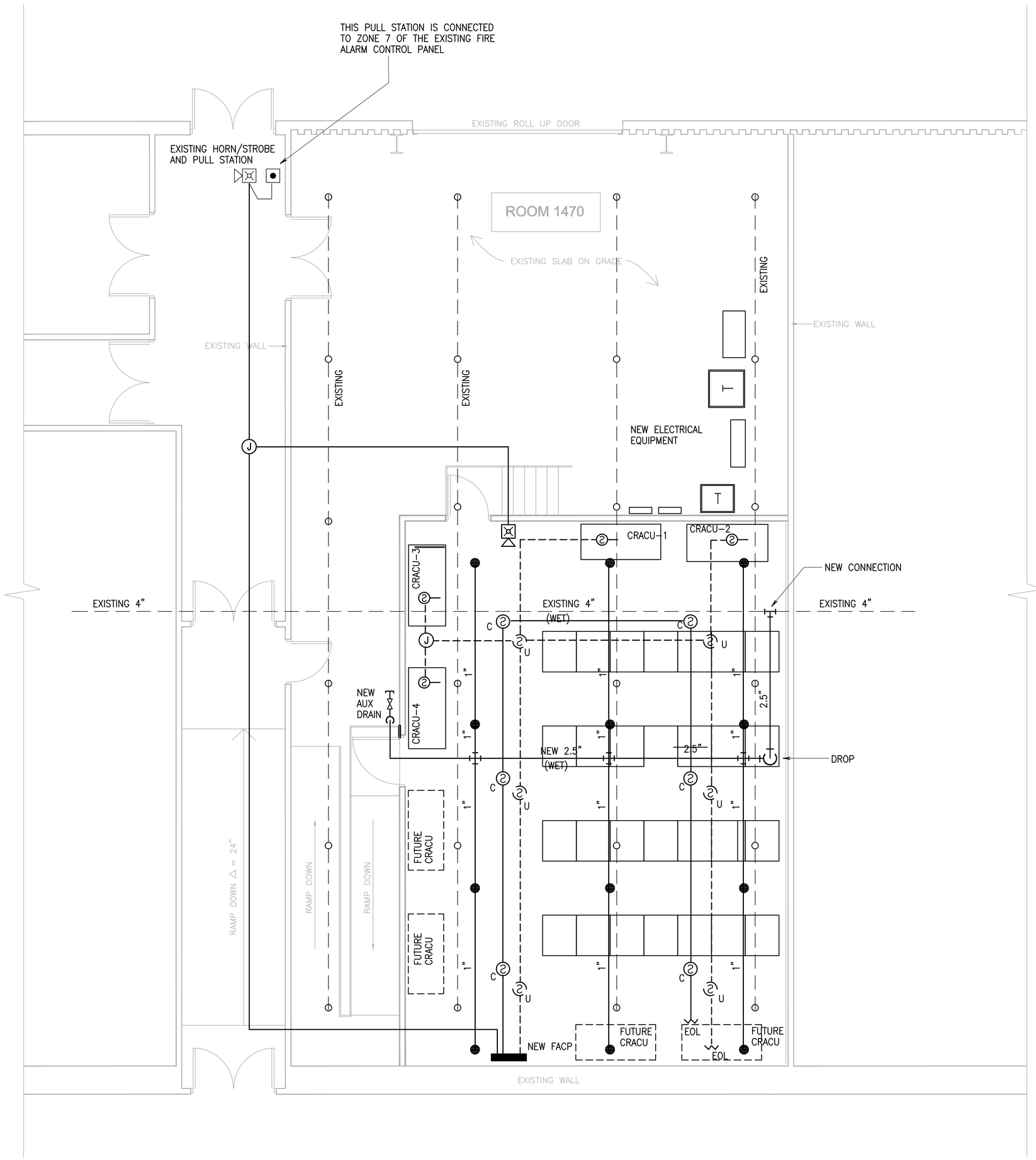

PARTIAL FIRST FLOOR PLAN

SCALE: 1/4" = 1'-0"

NEW CEILING-MOUNTED PHOTOELECTRIC SMOKE DETECTOR

NEW UNDER-FLOOR PHOTOELECTRIC SMOKE DETECTOR

CONNECT FA CIRCUIT TO AUX CONTACT IN DUCT SMOKE DETECTOR PROVIDED WITH CRAC UNIT.

NEW FIRE ALARM HORN/STROBE. MOUNT LENS 6'-8" A.F.F.

NEW FIRE ALARM CONTROL PANEL

EXISTING UPRIGHT SPRINKLERS AND BRANCHLINE AT HIGH ROOF

NEW PENDENT SPRINKLER AND BRANCHLINE ABOVE LOW CEILING

GENERAL NOTES: (APPLIES TO THIS DRAWING ONLY)

THE EXISTING FIRE ALARM SYSTEM IS AN ADT "UNIMODE" HARD-WIRED SYSTEM. INSTALL A NEW FIRE ALARM SUBPANEL IN THE CEETHERM LAB AND CONNECT MASTER ALARM AND TROUBLE CONTACTS TO EXISTING FACP ZONE 7. THE EXISTING FACP ZONE 7 SERVES THE PULL STATION IN THE ADJACENT CORRIDOR.

THE NEW FIRE ALARM SUBPANEL SHALL BE A 4-ZONE, HARD-WIRED, UL LISTED PANEL WITH 1 NOTIFICATION APPLIANCE CIRCUIT, POWER SUPPLY AND BATTERY CHARGER, MAINTENANCE-FREE STANDBY BATTERIES FOR 24 HOURS OF BACK-UP POWER, MASTER ALARM CONTACT, AND MASTER TROUBLE CONTACT. THE CABINET SHALL BE SURFACE-MOUNTED WITH A LOCKING FRONT DOOR. PROVIDE ALARM AND TROUBLE LEDs FOR EACH ZONE. THE PANEL SHALL OPERATE AT 24 VOLTS DC WHEN SUPPLIED WITH 120 VOLT AC PRIMARY POWER.

ZONE 1 SHALL BE CONNECTED TO CEILING SMOKE DETECTORS. ZONE 2 SHALL BE CONNECTED TO UNDERFLOOR SMOKE DETECTORS. ZONES 3 SHALL BE CONNECTED TO AUXILIARY CONTACTS ON DUCT SMOKE DETECTORS INSIDE THE COMPUTER ROOM AIR CONDITIONING UNITS (4 DETECTORS). ZONE 4 SHALL BE SPARE. ALL CIRCUITS SHALL BE WIRED AS CLASS B AND SHALL BE INSTALLED IN 0.75" EMT.

DUCT SMOKE DETECTORS ARE FURNISHED AND INSTALLED BY THE CRAC UNIT MANUFACTURER. WIRE TO NEW FACP.

INSTALL A NEW HORN/STROBE IN THE WALL OF THE CEETHERM LAB. CONNECT THIS DEVICE INTO THE EXISTING NOTIFICATION APPLIANCE CIRCUIT IN THE ADJACENT CORRIDOR. STROBE INTENSITY SHALL BE 60cd. THE DEVICE SHALL INCLUDE A RED FACEPLATE.

THE FIRE ALARM INSTALLATION SHALL CONFORM TO NFPA 72-2002 AND NFPA 70-2002. TEE-TAPS ARE NOT ALLOWED ON ANY CIRCUITS.

THE EXISTING SPRINKLER SYSTEM AT THE ROOF IS HYDRAULICALLY SIZED TO DELIVER 0.19 GPM/SQFT OVER 1500 SQFT. INSTALL A NEW BRANCH ON THE EXISTING CROSSMAIN AND DROP DOWN TO FEED NEW SPRINKLER BRANCHLINES ABOVE THE CEETHERM LAB CEILING. HANGERS SHALL BE UL LISTED AND SHALL HAVE A GALVANIZED FINISH. SUPPORT THE NEW BRANCHLINES FROM THE NEW CEILING JOIST.

NEW SPRINKLER HEADS SHALL BE UL LISTED, QUICK RESPONSE, PENDENT TYPE WITH A CHROME FINISH AND A SHALLOW CHROME ESCUTCHEON.

NEW PIPING SHALL BE SCHEDULE 40 BLACK STEEL WITH STANDARD WEIGHT THREADED CAST IRON OR GROOVED FITTINGS. NO FITTINGS EMPLOYING SET SCREWS OR PLAIN-END PIPE SHALL BE USED.

THE SPRINKLER SYSTEM MODIFICATIONS SHALL BE PERFORMED BY A COMPANY HOLDING A CURRENT SPRINKLER CONTRACTOR'S LICENSE FROM THE STATE OF GEORGIA. THE INSTALLATION SHALL CONFORM TO NFPA 13-2002.

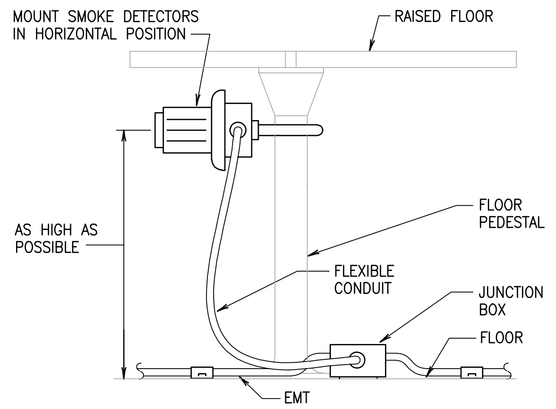

UNDERFLOOR SMOKE DETECTORS

NO SCALE

NO.	REVISIONS	DATE
	ISSUED FOR CONSTRUCTION	09/13/04

NO.	REVISIONS	DATE

Newcomb & Boyd

Consulting Engineering Group
Suite 525
303 Peachtree Center Avenue, NE
Atlanta, Georgia 30303-1277
T 404 730-8400
F 404 730-8401
CONTACT: JUSTIN ZIEGLER
N&B PROJECT: 04N080

GEORGIA INSTITUTE OF TECHNOLOGY
CEETHERM DATA CENTER
TEST LAB

TITLE

FIRE PROTECTION PLAN

THIS DRAWING WAS PREPARED SITE SPECIFIC FOR THE ABOVE-NAMED PROJECT AND IS NOT, WITHOUT THE EXPRESS WRITTEN CONSENT OF NEWCOMB & BOYD, INTENDED FOR USE ON ADDITIONS TO THIS PROJECT, FOR COMPLETION OF THIS PROJECT BY OTHERS, OR FOR USE ON OTHER PROJECTS.

SEAL

PROJECT NO.	04N080
DATE	09/08/04
SCALE	1/4"=1'-0"
DRAWING NO.	F01

OF

FILE: Q:\04N080\PROJECT CAD DRAWING FILES\1775041\01 FIRE PROTECTION PLAN.DWG
PLOT BY: JT
PLOT DATE: 11/16/2004
PLOT TIME: 8:10:26 AM